A-max 16 ∅16 mm, Graphite Brushes, 2 Watt

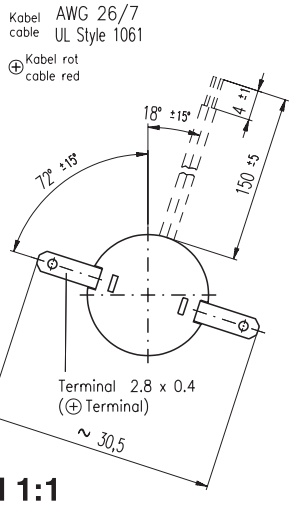

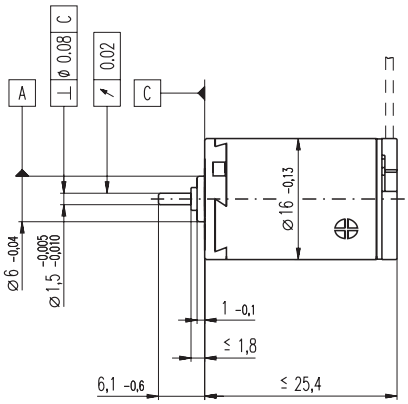

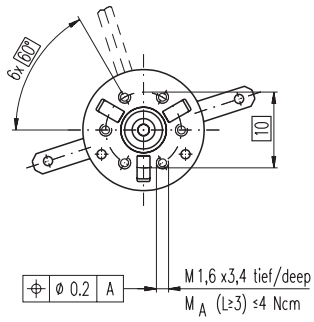

Stock program
Standard program
Special program (on request)

		Order Number									
	with terminals	110061	110062	110063	110064	110065	110066	110067	110068	110069	110070
	with cables	139821	352853	352854	352855	325083	352856	205903	352857	266076	352858
Motor Data											
	Values at nominal voltage										
1	Nominal voltage V	1.5	3.0	6.0	9.0	12.0	14.0	15.0	18.0	21.0	30.0
2	No load speed rpm	10200	11700	9620	11800	11800	11800	11200	11200	11600	10800
3	No load current mA	201	117	46.7	39.1	29.3	25.1	22.2	18.5	16.5	10.7
4	Nominal speed rpm	8670	7860	3240	5460	5410	5450	4820	4780	5070	4160
5	Nominal torque (max. continuous torque) mNm	0.686	1.40	2.51	2.47	2.45	2.46	2.46	2.44	2.39	2.35
6	Nominal current (max. continuous current) A	0.720	0.720	0.494	0.394	0.294	0.253	0.225	0.186	0.162	0.105
7	Stall torque mNm	4.93	4.51	4.02	4.82	4.76	4.81	4.53	4.47	4.48	4.03
8	Starting current A	3.76	1.97	0.721	0.700	0.519	0.450	0.377	0.310	0.275	0.164
9	Max. efficiency %	58	57	56	58	58	58	58	57	57	55
	Characteristics										
10	Terminal resistance Ω	0.399	1.52	8.32	12.8	23.1	31.1	39.8	58.0	76.2	183
11	Terminal inductance mH	0.017	0.0519	0.306	0.467	0.831	1.13	1.42	2.05	2.61	6.01
12	Torque constant mNm / A	1.31	2.29	5.57	6.88	9.17	10.7	12.0	14.4	16.3	24.7
13	Speed constant rpm / V	7290	4170	1720	1390	1040	893	795	663	587	387
14	Speed / torque gradient rpm / mNm	2220	2770	2560	2600	2630	2600	2630	2670	2750	2880
15	Mechanical time constant ms	24.5	23.7	23.2	23.2	23.2	23.2	23.4	23.3	23.4	23.8
16	Rotor inertia gcm²	1.05	0.816	0.864	0.854	0.844	0.854	0.848	0.834	0.811	0.788

Specifications

	Thermal data	
17	Thermal resistance housing-ambient	29.8 K / W
18	Thermal resistance winding-housing	5.5 K / W
19	Thermal time constant winding	3.53 s
20	Thermal time constant motor	313 s
21	Ambient temperature	-30 ... +85°C
22	Max. permissible winding temperature	+125°C
	Mechanical data (sleeve bearings)	
23	Max. permissible speed	11900 rpm
24	Axial play	0.05 - 0.15 mm
25	Radial play	0.012 mm
26	Max. axial load (dynamic)	0.8 N
27	Max. force for press fits (static)	35 N
28	Max. radial loading, 5 mm from flange	1.4 N
	Mechanical data (ball bearings)	
23	Max. permissible speed	11900 rpm
24	Axial play	0.05 - 0.15 mm
25	Radial play	0.025 mm
26	Max. axial load (dynamic)	2.2 N
27	Max. force for press fits (static)	30 N
28	Max. radial loading, 5 mm from flange	7.8 N
	Other specifications	
29	Number of pole pairs	1
30	Number of commutator segments	7
31	Weight of motor	21 g

Values listed in the table are nominal.
Explanation of the figures on page 49.

Option
Ball bearings in place of sleeve bearings

Operating Range

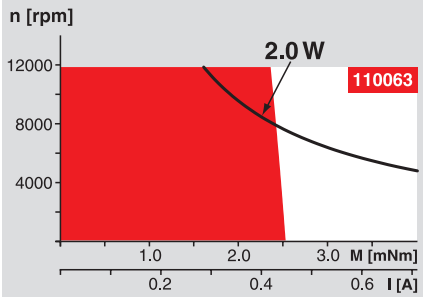

Comments

Continuous operation
In observation of above listed thermal resistance (lines 17 and 18) the maximum permissible winding temperature will be reached during continuous operation at 25°C ambient.
= Thermal limit.

Short term operation
The motor may be briefly overloaded (recurring).

Assigned power rating

maxon Modular System

Overview on page 16 - 21

Spur Gearhead
∅16 mm
0.01 - 0.1 Nm
Page 219 / 220 / 221 / 222

Planetary Gearhead
∅16 mm
0.06 - 0.18 Nm
Page 223

Planetary Gearhead
∅16 mm
0.1 - 0.3 Nm
Page 224

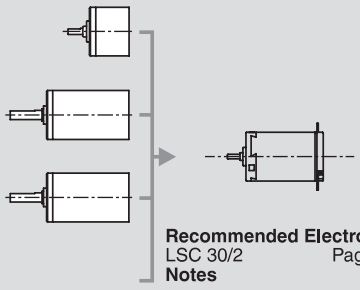

Recommended Electronics:
LSC 30/2 Page 276
Notes 18

A-max 22 ∅22 mm, Precious Metal Brushes CLL, 5 Watt, CE approved

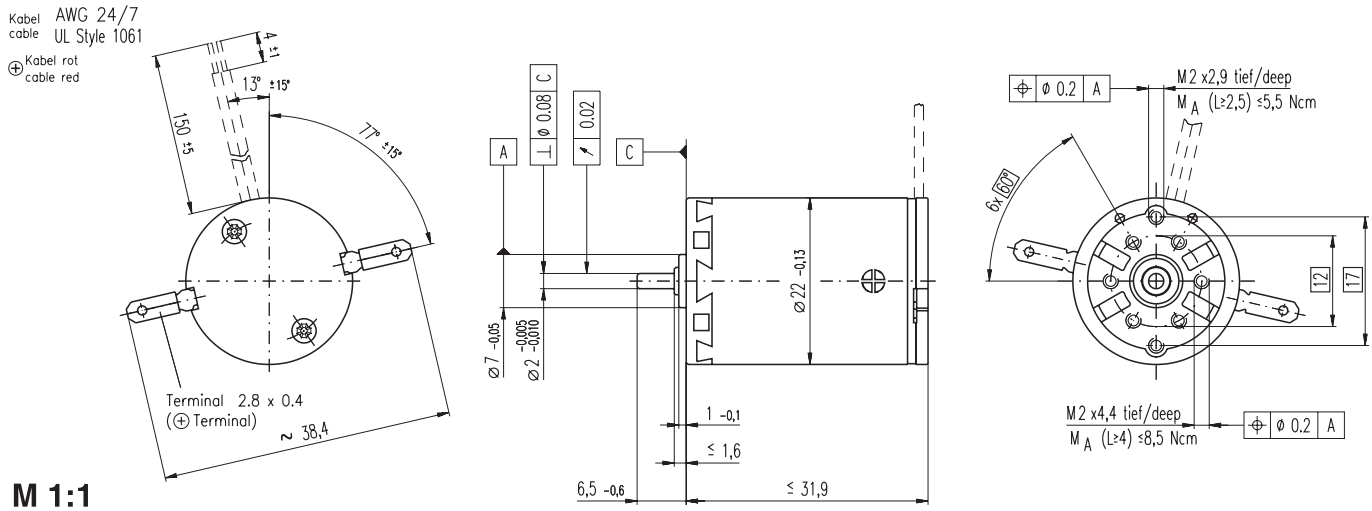

Stock program
Standard program
Special program (on request)

Order Number

with terminals		110117	110119	110120	110121	110122	110123	110124	110125	110126	110127	110128	110129
with cables		139838	218799	238798	202413	258367	137255	134267	134666	267423	137476	310003	342390
Motor Data													
Values at nominal voltage													
1 Nominal voltage	V	6.0	9.0	9.0	12.0	12.0	15.0	18.0	24.0	30.0	36.0	48.0	48.0
2 No load speed	rpm	9640	9980	8770	10400	9410	10300	9970	10700	10800	9800	9290	8380
3 No load current	mA	29.6	20.9	16.9	16.9	14.2	13.1	10.4	8.83	7.20	5.07	3.48	2.94
4 Nominal speed	rpm	7480	7350	6150	7820	6760	7620	7310	8060	8160	7090	6520	5620
5 Nominal torque (max. continuous torque)	mNm	4.81	6.33	6.42	6.36	6.31	6.29	6.25	6.23	6.18	6.15	6.03	6.10
6 Nominal current (max. continuous current)	A	0.840	0.757	0.673	0.597	0.533	0.465	0.374	0.301	0.241	0.181	0.126	0.115
7 Stall torque	mNm	21.5	24.1	21.5	25.5	22.5	24.5	23.5	25.2	25.1	22.3	20.3	18.6
8 Starting current	A	3.65	2.81	2.21	2.34	1.86	1.77	1.37	1.19	0.957	0.641	0.414	0.343
9 Max. efficiency	%	83	84	84	84	84	84	84	84	84	83	83	83
Characteristics													
10 Terminal resistance	Ω	1.64	3.20	4.07	5.13	6.46	8.48	13.1	20.2	31.3	56.2	116	140
11 Terminal inductance	mH	0.106	0.222	0.288	0.362	0.445	0.584	0.890	1.37	2.10	3.68	7.29	8.95
12 Torque constant	mNm / A	5.90	8.55	9.73	10.9	12.1	13.9	17.1	21.2	26.2	34.8	48.9	54.3
13 Speed constant	rpm / V	1620	1120	981	875	790	689	558	450	364	274	195	176
14 Speed / torque gradient	rpm / mNm	452	418	410	412	422	422	428	429	435	443	462	454
15 Mechanical time constant	ms	19.1	18.8	18.7	18.7	18.7	18.7	18.7	18.8	18.8	18.9	19.1	19.0
16 Rotor inertia	gcm²	4.04	4.29	4.35	4.33	4.24	4.24	4.18	4.18	4.14	4.07	3.95	3.99

Specifications

Thermal data

17	Thermal resistance housing-ambient	20 K / W
18	Thermal resistance winding-housing	6.0 K / W
19	Thermal time constant winding	10.1 s
20	Thermal time constant motor	540 s
21	Ambient temperature	-30 ... +65°C
22	Max. permissible winding temperature	+85°C

Mechanical data (sleeve bearings)

23	Max. permissible speed	16000 rpm
24	Axial play	0.05 - 0.15 mm
25	Radial play	0.012 mm
26	Max. axial load (dynamic)	1 N
27	Max. force for press fits (static)	80 N
28	Max. radial loading, 5 mm from flange	2.8 N

Mechanical data (ball bearings)

23	Max. permissible speed	16000 rpm
24	Axial play	0.05 - 0.15 mm
25	Radial play	0.025 mm
26	Max. axial load (dynamic)	3.3 N
27	Max. force for press fits (static)	45 N
28	Max. radial loading, 5 mm from flange	12.3 N

Other specifications

29	Number of pole pairs	1
30	Number of commutator segments	9
31	Weight of motor	54 g

CLL = Capacitor Long Life

Values listed in the table are nominal.
Explanation of the figures on page 49.

Option
Ball bearings in place of sleeve bearings
Without CLL

Operating Range

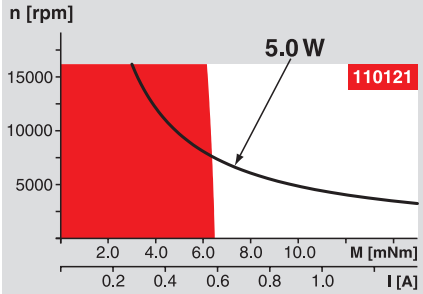

Comments

Continuous operation
In observation of above listed thermal resistance (lines 17 and 18) the maximum permissible winding temperature will be reached during continuous operation at 25°C ambient.
= Thermal limit.

Short term operation
The motor may be briefly overloaded (recurring).

Assigned power rating

maxon Modular System

Overview on page 16 - 21

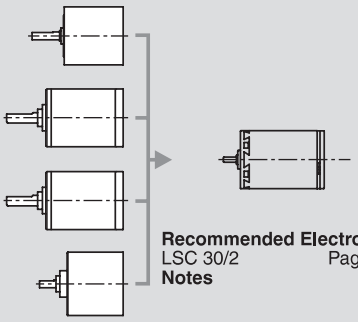

Planetary Gearhead
∅22 mm
0.1 - 0.6 Nm
Page 228 / 229

Planetary Gearhead
∅22 mm
0.5 - 1.0 Nm
Page 230

Planetary Gearhead
∅22 mm
0.5 - 2.0 Nm
Page 231

Spur Gearhead
∅24 mm
0.1 Nm
Page 234

Recommended Electronics:
LSC 30/2 Page 276
Notes 18

RE 25 ∅25 mm, Graphite Brushes, 20 Watt

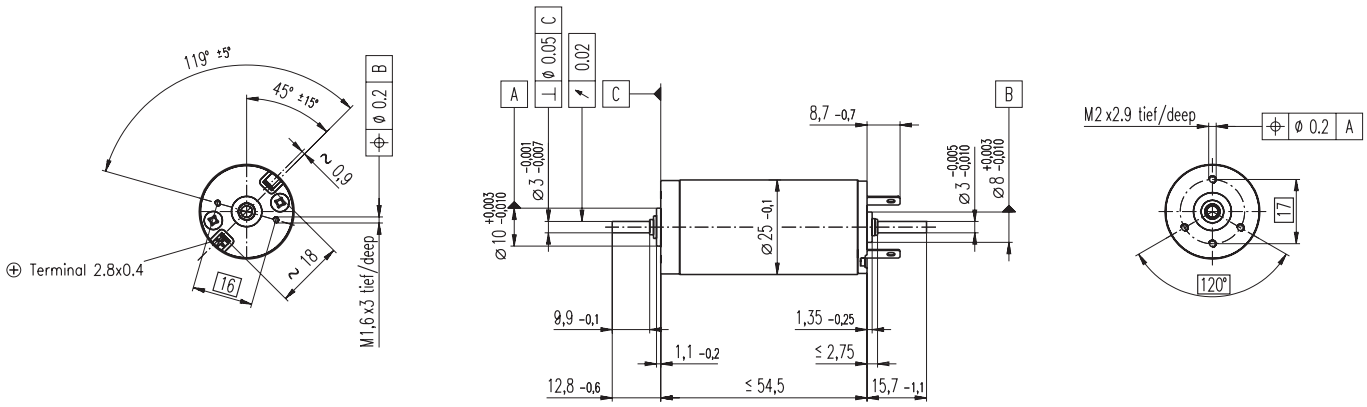

M 1:2

Stock program
Standard program
Special program (on request)

	Order Number								
according to dimensional drawing	118749	118750	118751	118752	118753	118754	118755	118756	118757
shaft length 15.7 shortened to 4 mm	302002	302003	302004	302005	302006	302007	302001	302008	302009
Motor Data									
Values at nominal voltage									
1 Nominal voltage V	9.0	15.0	18.0	24.0	30.0	42.0	48.0	48.0	48.0
2 No load speed rpm	10000	9650	10200	9550	9860	11100	10300	8230	5050
3 No load current mA	110	60.7	53.9	36.9	30.5	25.2	20.1	15.2	8.51
4 Nominal speed rpm	8980	8470	8890	8360	8680	9950	9190	7070	3870
5 Nominal torque (max. continuous torque) mNm	11.1	20.6	23.1	26.7	27.2	27.6	28.4	29.4	30.8
6 Nominal current (max. continuous current) A	1.50	1.50	1.47	1.17	0.983	0.799	0.667	0.548	0.352
7 Stall torque mNm	244	237	233	257	263	299	280	222	136
8 Starting current A	30.7	16.6	14.3	11.0	9.21	8.39	6.38	4.03	1.52
9 Max. efficiency %	77	83	84	86	86	88	88	87	85
Characteristics									
10 Terminal resistance Ω	0.293	0.902	1.26	2.19	3.26	5.00	7.53	11.9	31.6
11 Terminal inductance mH	0.0275	0.0882	0.115	0.238	0.353	0.551	0.832	1.31	3.48
12 Torque constant mNm / A	7.97	14.3	16.3	23.4	28.5	35.7	43.8	55.0	89.7
13 Speed constant rpm / V	1200	669	585	407	335	268	218	173	106
14 Speed / torque gradient rpm / mNm	44.1	42.3	45.3	38.1	38.2	37.5	37.4	37.6	37.5
15 Mechanical time constant ms	5.36	4.58	4.49	4.28	4.20	4.13	4.11	4.10	4.09
16 Rotor inertia gcm²	11.6	10.3	9.45	10.7	10.5	10.5	10.5	10.4	10.4

Specifications

Thermal data

17	Thermal resistance housing-ambient	14 K / W
18	Thermal resistance winding-housing	3.1 K / W
19	Thermal time constant winding	12.4 s
20	Thermal time constant motor	910 s
21	Ambient temperature	-30 ... +100°C
22	Max. permissible winding temperature	+125°C

Mechanical data (ball bearings)

23	Max. permissible speed	14000 rpm
24	Axial play	0.05 - 0.15 mm
25	Radial play	0.025 mm
26	Max. axial load (dynamic)	3.2 N
27	Max. force for press fits (static)	64 N
	(static, shaft supported)	270 N
28	Max. radial loading, 5 mm from flange	16 N

Other specifications

29	Number of pole pairs	1
30	Number of commutator segments	11
31	Weight of motor	130 g

Values listed in the table are nominal.
Explanation of the figures on page 49.

Option
Preloaded ball bearings

Operating Range

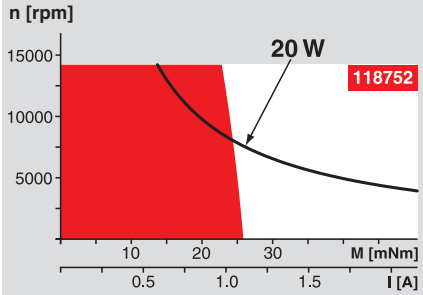

Comments

Continuous operation
In observation of above listed thermal resistance (lines 17 and 18) the maximum permissible winding temperature will be reached during continuous operation at 25°C ambient.
= Thermal limit.

Short term operation
The motor may be briefly overloaded (recurring).

Assigned power rating

maxon Modular System

Overview on page 16 - 21

Planetary Gearhead
∅26 mm
0.5 - 2.0 Nm
Page 235

Planetary Gearhead
∅32 mm
0.4 - 2.0 Nm
Page 237

Planetary Gearhead
∅32 mm
0.75 - 6.0 Nm
Page 238 / 240

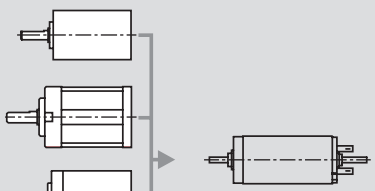

Recommended Electronics:

LSC 30/2	Page 276
ADS 50/5	276
ADS_E 50/5	277
EPOS 24/5	294
EPOS2 50/5	295
EPOS P 24/5	297
Notes	**18**

Encoder MR
128 - 1000 CPT,
3 channels
Page 258

Encoder Enc
22 mm
100 CPT, 2 channels
Page 260

Encoder HED_ 5540
500 CPT,
3 channels
Page 262 / 264

DC-Tacho DCT
∅22 mm,
0.52 V
Page 271

Brake AB 28
∅40 mm
24 VDC, 0.4 Nm
Page 308